ROUNDED RECTANGLE MIXER & SPOUT BACKPLATE

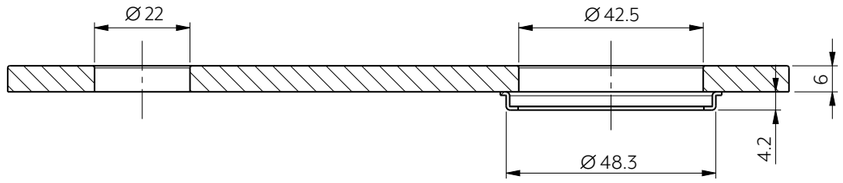

Section View A-A

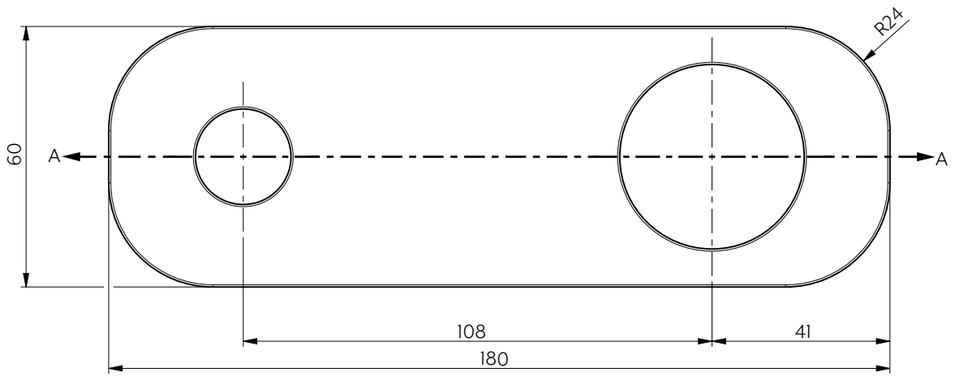

Front View

Note: Dimensions are nominal measurements only

SPECIFICATIONS

RECOMMENDED USE	Domestic
MATERIAL	Solid Brass

Disclaimer: Products in this specification manual must by regulation be installed by licensed and registered trade people. The manufacturer/distributor reserves the right to vary specifications or delete models from their range without prior notification. Dimensions are nominal measurements only. Dimensions and set-outs listed are correct at time of publication however the manufacturer/distributor takes no responsibility for printing errors. All ABI Products are designed in Australia. Copyright ABI Interiors Pty Ltd 2021.

INSTALLATION GUIDE

Note: This product must be installed by a licensed plumber.
This is a general installation guide - there are many factors that are involved that can alter the installation method. For installs outside Australia and New Zealand, the standards in your respective country must be adhered to by your licensed tradesperson.

USE ROUGH-IN TEMPLATE PROVIDED TO ENSURE ACCURATE POSITIONING

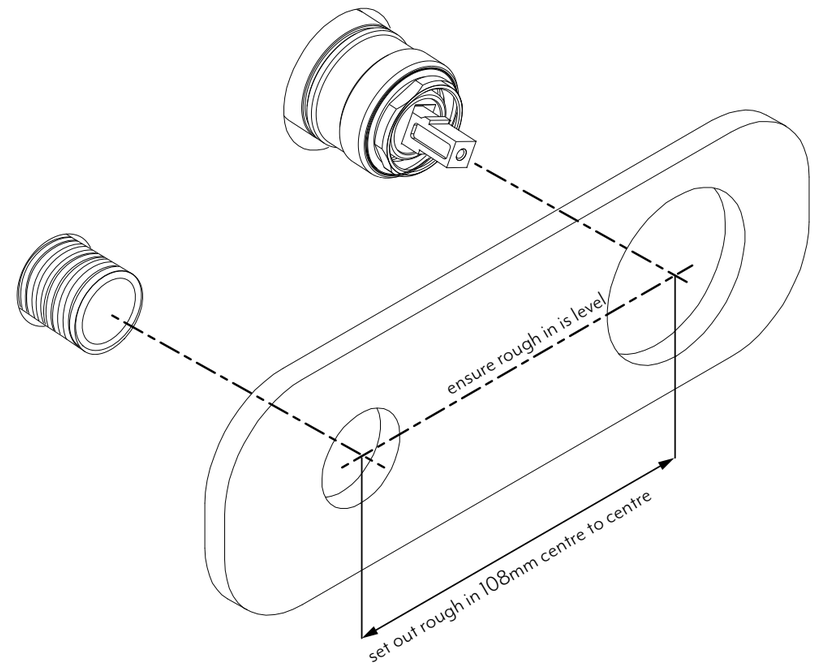

Regularly clean with mild liquid detergent or soap and water

DO NOT use cream cleaners or bleach. These substances are abrasive

DO NOT use cleaning pads with abrasive surfaces as this may scratch the material

WALL MOUNTED SPOUT

WaterMark
AS/NZS 3718:2005
WM-022852

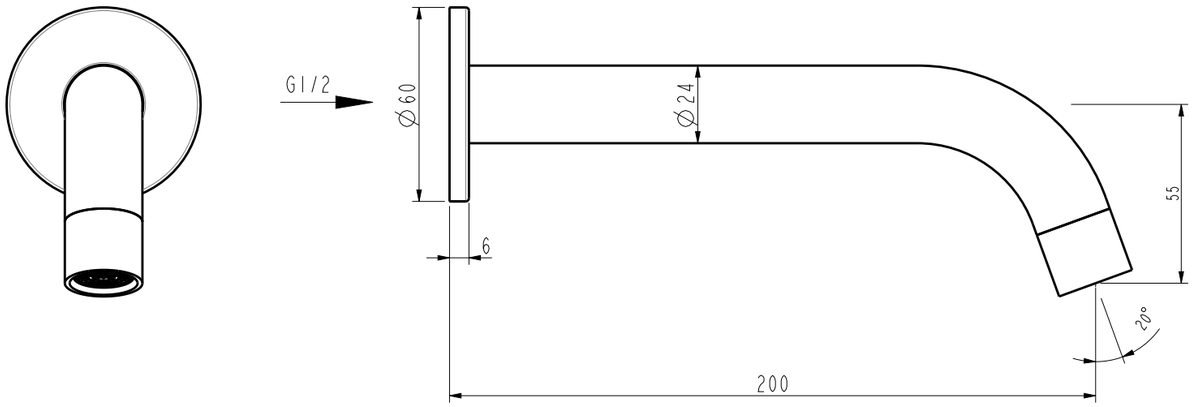

Note: Dimensions are nominal measurements only

SPECIFICATIONS

RECOMMENDED USE	Domestic
MATERIAL	Solid Brass
TEMPERATURE RATING	Maximum continuous working temperature 75°C If the water temperature exceeds 75°C, an approved tempering valve must be fitted
PRESSURE RATING	Recommended minimum working pressure 0.2 Bar Recommended maximum working pressure 5 Bar Hot and cold water inlet pressure should be equal

Disclaimer: Products in this specification manual must by regulation be installed by licensed and registered trade people. The manufacturer/distributor reserves the right to vary specifications or delete models from their range without prior notification. Dimensions are nominal measurements only. Dimensions and set-outs listed are correct at time of publication however the manufacturer/distributor takes no responsibility for printing errors. All ABI Products are designed in Australia. Copyright ABI Interiors 2019.

INSTALLATION GUIDE

Note: This product must be installed by a licensed tradesperson. This is a general installation guide - there are many factors that are involved that can alter the installation method.
For installs outside Australia and New Zealand, the standards in your respective country must be adhered to by your licensed tradesperson.

1. Insure back plate is installed as per Rectangle Back Plate Installation guide.

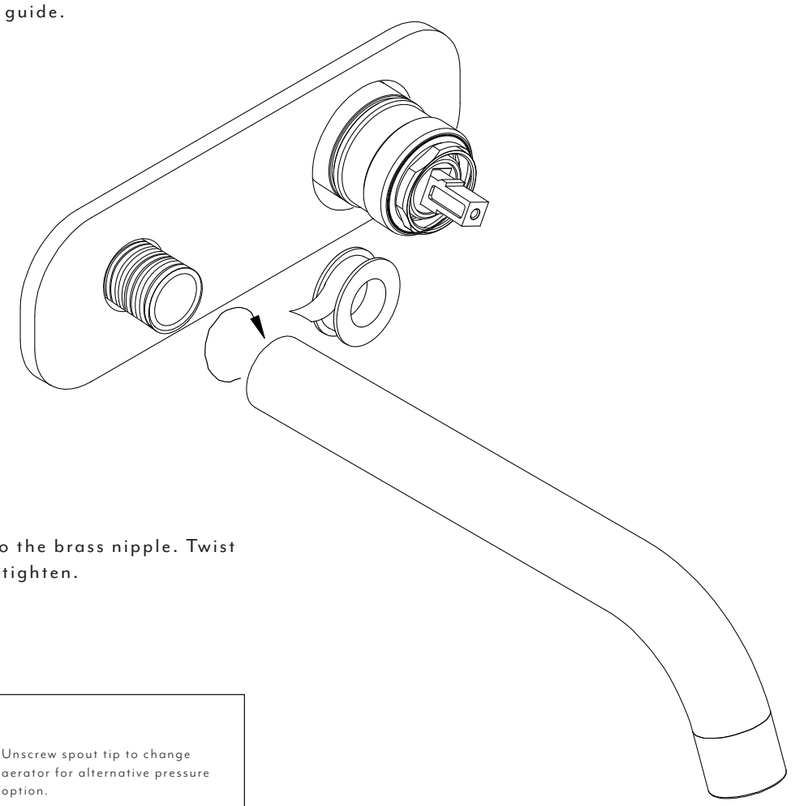

2. Apply the teflon tape to the brass nipple. Twist the spout on and hand tighten.

High Pressure

Low Pressure

Unscrew spout tip to change aerator for alternative pressure option.

Note: Refer to AUS to UK adaptor Installation instructions.

IN THE BOX

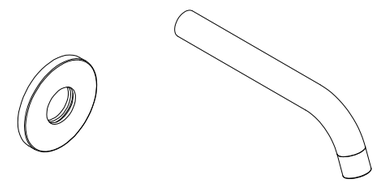

1x Back Plate
(Not required for this bundle)

1x Spout

Regularly clean with mild liquid detergent or soap and water

DO NOT use cream cleaners or bleach. These substances are abrasive

DO NOT use cleaning pads with abrasive surfaces as this may scratch the material

MILANI PROGRESSIVE HANDLE SET

Just Colour Parts

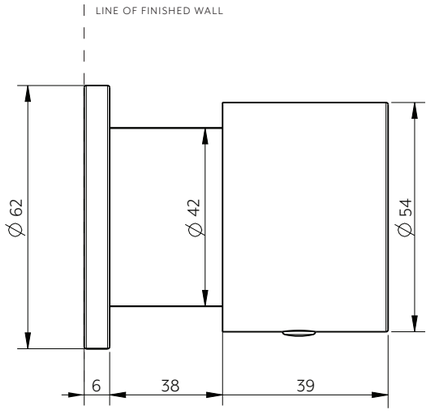

WaterMark
AS/NZS 3718:2005
WM-022852

In Wall

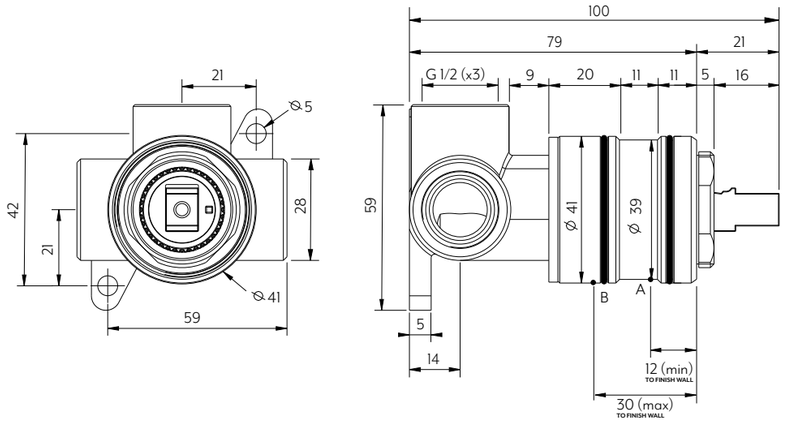

Disclaimer: To achieve infiniti (interchangeable sleeves) finish wall must fall between Point A and B. Your In-Wall component must be installed without the sleeve attached, please ensure that your chosen sleeve doesn't break your waterproofing seal.

Note: Dimensions are nominal measurements only

SPECIFICATIONS

RECOMMENDED USE	Domestic
PRESSURE RATING	Recommended minimum working pressure 0.2 Bar Recommended maximum working pressure 5 Bar Hot and cold water inlet pressure should be equal
TEMPERATURE RATING	Maximum continuous working temperature 75°C If the water temperature exceeds 75°C, an approved tempering valve must be fitted
SUITABLE HOT WATER UNITS	Storage tank: Yes Continuous Flow: Yes Gravity Feed: Suitable

Disclaimer: Products in this specification manual must by regulation be installed by licensed and registered trade people. The manufacturer/distributor reserves the right to vary specifications or delete models from their range without prior notification. Dimensions are nominal measurements only. Dimensions and set-outs listed are correct at time of publication however the manufacturer/distributor takes no responsibility for printing errors. All ABI Products are designed in Australia. Copyright ABI Interiors Pty Lty 2021.

INSTALLATION GUIDE

Note: This product must be installed by a licensed plumber.
This is a general installation guide - there are many factors that are involved that can alter the installation method. The standards in your respective country must be adhered to by your licensed tradesperson.

1. Fasten screws to secure the wall mixer into wall structure.

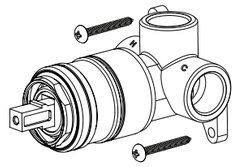

2. Attach water supply and water outlet. TEST AND CHECK FOR LEAKS.

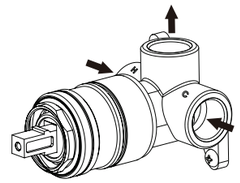

3. Create a 47mm hole in cement sheet and tiles.
Waterproof at this point if future sleeve change is desired.
DO NOT WATERPROOF SLEEVE.

Please ensure that the hole is big enough to allow for the sleeve to slide on at fit-off stage.

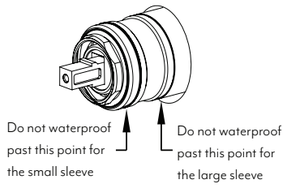

4. Push the sleeve over the body until it is as far back as possible and nut thread is exposed. Screw the dome onto the brass fitting and tighten.

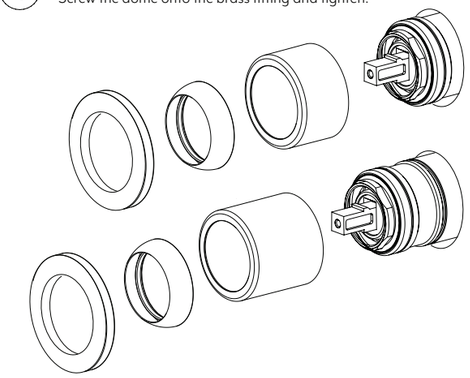

5. Place the handle onto the fitting. Fasten the grub screw firmly with the allen key.

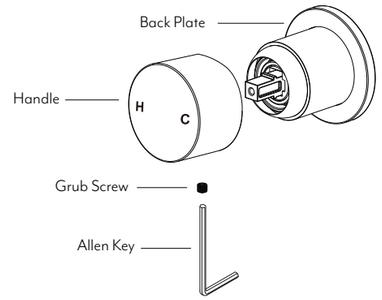

HOW TO CUSTOMIZE YOUR MIXER

STEP 1: Visit our online shop or go in-store to purchase your handle kit - Be sure to check the mixer type before you purchase!

STEP 2: Remove the handle, dome and sleeve from your mixer & repeat steps above for installation! (Ensure waterproofing was conducted prior to sleeve install).

STEP 3: Be sure to get this checked by your plumber prior to using.

WHAT'S IN THE BOX
EXPLODED VIEW

1. Long Sleeve
2. Dome
3. Back Plate
4. Handle
5. Allen Key
6. Short Sleeve

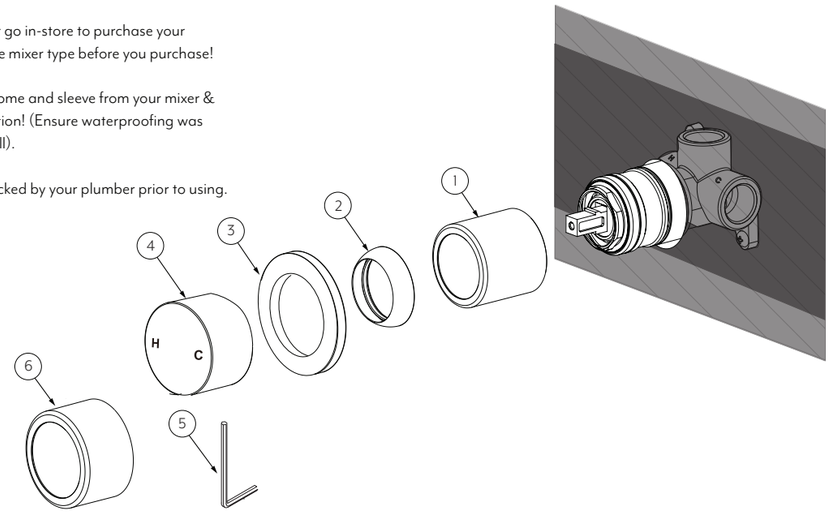

Regularly clean with mild liquid detergent or soap and water

DO NOT use cream cleaners or bleach. These substances are abrasive

DO NOT use cleaning pads with abrasive surfaces as this may scratch the material